All-Axis Servo Driven Type
Single-Axis Servo Driven Type
Swing Type
Side Entry Type
For Vertical Molding Machine
Stock System
Product Series Guide P11

RCⅡ-100-DW, RCⅡ-150-DW, RCⅡ-250-DW

Saving space with a two-in-one composite system that performs insertion, inspection, cutting, assembly, and more

Clamping force 80 - 300tf

High end

Vibration control

Power-saving

Low posture (Double speed mechanism)

All-axis servo-driven

Single Unit that Performs Multiple Roles

The RC-DW series consolidates a take-out robot and a handling robot into one versatile unit. Take-out and handling units operate independently and enable one RC-DW to do the work of two conventional robots; an ideal solution for multi-process automated molding systems.

Supports a Variety of Complex Automated Systems

The RC-DW's two robot units team up to efficiently handle insert molding, vision inspection, gate cutting, assembly, molded part inspection, and many other value-added processes.

Standard Specifications

Power supply	Drive method	Controller model	Working air pressure	Flip angle
200/220 VAC (50/60 Hz) 3 phase	Digital servo motor 6/8/10-axis	E-touch Ⅱ	0.49MPa	90°

Model		Power consumption 3 phase (A MAX)	Traverse stroke (mm)	A side Kick stroke (mm) Main arm	A side Kick stroke (mm) Sub arm	A side Vertical stroke (mm) Main arm	A side Vertical stroke (mm) Sub arm	B side Kick stroke (mm) Main arm	B side Kick stroke (mm) Sub arm	B side Vertical stroke (mm) Main arm	B side Vertical stroke (mm) Sub arm	Air consumption (NL/cycle)	Payload (kg)	Target IMM clamp capacity (tf)
RCⅡ-100	M-MS	18.0	2100	583	–	700	–	523	523	700	700	18.6 (ECO Vacuum OFF) 4.4 (ECO Vacuum ON)	5	80 - 130
	MS-M	18.0		523	523		700	583	–		–			
	MS-MS	20.8		523	523		700	523	523		700			
	M-M	15.3		583	–		–	583	–		–			
RCⅡ-150	M-MS	18.0		583	–	850	–	523	523	850	850	19.0 (ECO Vacuum OFF) 4.4 (ECO Vacuum ON)		100 - 220
	MS-M	18.0		523	523		850	583	–		–			
	MS-MS	20.8		523	523		850	523	523		850			
	M-M	15.3		583	–		–	583	–		–			
RCⅡ-250	M-MS	18.0		733	–	950	–	673	673	950	950	19.8 (ECO Vacuum OFF) 5.0 (ECO Vacuum ON)		180 - 300
	MS-M	18.0		673	673		950	733	–		–			
	MS-MS	20.8		673	673		950	673	673		950			
	M-M	15.3		733	–		–	733	–		–			

(Arm units for the A side and B side may be selected by the customer according to the application.)
Payload includes the end-of-arm tool.

Separate catalog available

RCⅡ-100/150/250-MS-M (Rear (Non-operator) Side Discharge Direction)
* For layout drawings of other DW configurations, please contact your local Yushin sales representative.

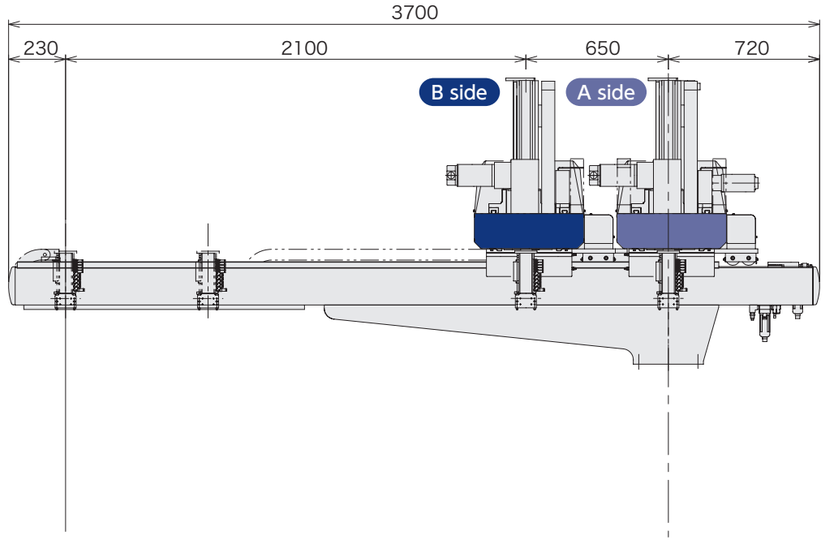

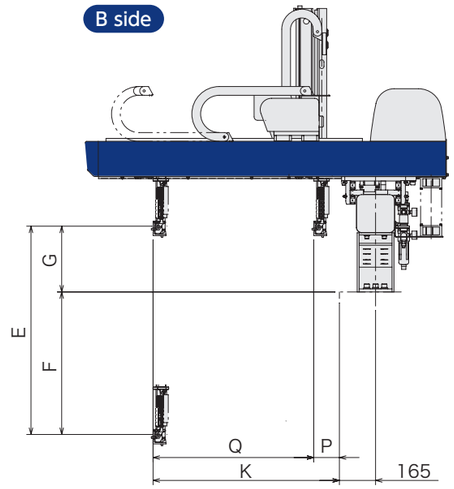

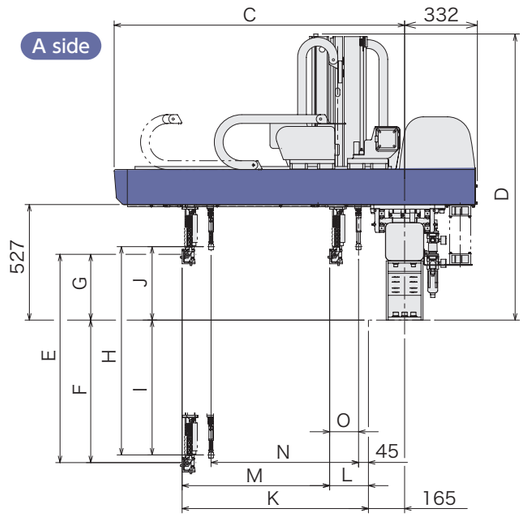

(mm)

Model	C	D	E	F	G	H	I	J	K	L	M	N	O	P	Q
RCⅡ-100-MS-M	1175	1180	700	400	300	700	365	335	700	177	523	523	132	117	583
RCⅡ-150-MS-M		1255	850	550		850	515								
RCⅡ-250-MS-M	1325	1305	950	650		950	615		850		673	673			733

Controller (mm)

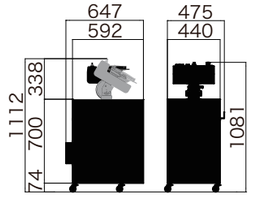

Request Yushin catalog https://www.ype.co.jp/request/