All-Axis Servo Driven Type
Swing Type
Side Entry Type
For Vertical Molding Machine
Stock System
Product Series Guide P11

SD-H/G-5080S/D

Provides SD series with various technologies for vibration control, high-speed, and energy-saving

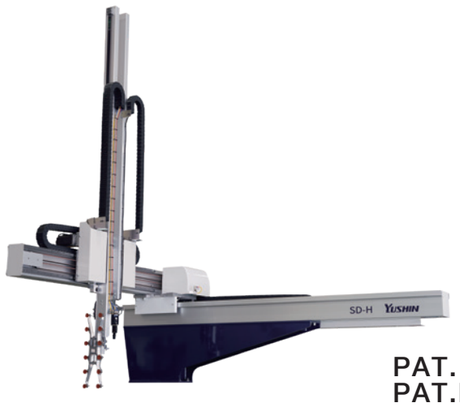

PAT.
PAT.P

Clamping force 500 - 800tf

VIbration control

Optimized design + Power-saving

All-axis servo-driven

SD-H-specific function Multi Molding Mode

A single take-out robot can support various molding by switching between three types.

- High cycle mold mode
  Medical products, packages, 5G parts, ...
- Precision mold mode
  Lenses, connectors, EV parts, ...
- High weight mode
  Insert molding, multi-cavity molding, ...

3D-Design Optimization

Applied 3D-Design Optimization used in FRA series,the high end models of Yushin, to parts of the take-out robots. This yielded a lightweight, highly-rigid body, which allows higher cycle.

Standard Specifications

Power supply	Drive method	Controller model	Working air pressure	Flip angle
200/220 VAC (50/60 Hz) Single phase	Digital servo motor 3/5-axis	E-touch Lite 3	0.49MPa	90°

Model	Power consumption	Traverse stroke [mm]	Kick stroke [mm]		Vertical stroke [mm]		Air consumption [NL/cycle]	Payload [kg]	Clamp force of compatible molding machine[tf]
			Main arm	Sub arm	Main arm	Sub arm			
SD-H/G-5080S	S type 1.9kVA 200 VAC 9.3A	1700 (1900) (2200) (2500) (3000)	1100	—	1300 (1500) (1700)	—	4.4 With ECO Vacuum	12	500-800
SD-H/G-5080D	D type 2.5kVA 200 VAC 12.3A		940	940		1300 (1500) (1700)			

S type : Main arm only D type : Main arm and sub arm
( ) : Modified stroke
Payload includes weight of end-of-arm tool.
Robots with 1901mm or longer traverse stroke require a beam-end support stanchion.

Separate catalog available

Rear (Non-operator) Side Discharge Direction (mm)

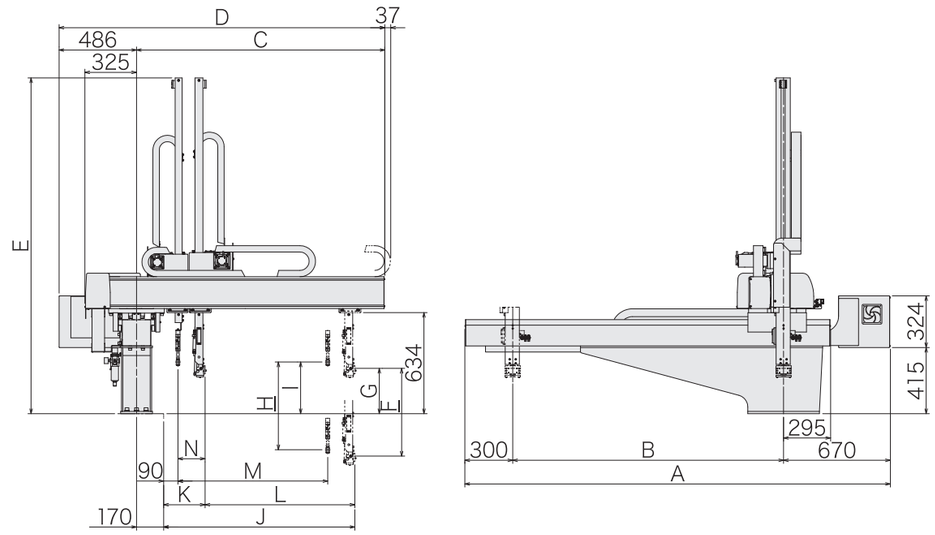

Operator Side Discharge Direction (mm)

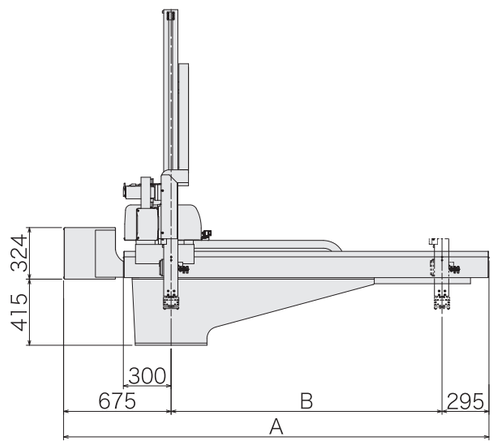

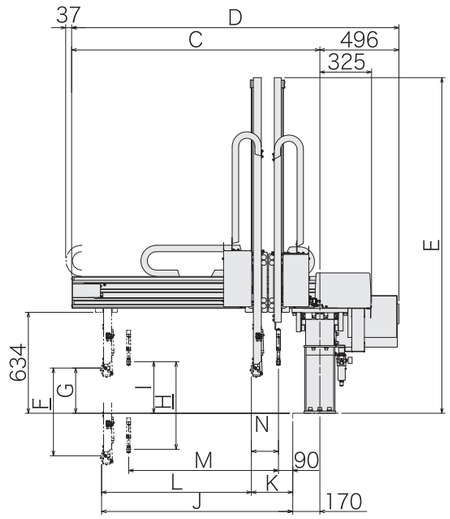

[mm]

Model	A	B	C	D Operator Side Discharge Direction	D Rear [Non-operator] Side Discharge Direction	E	F	G
SD-H/G-5080S	2670 (2870) (3170) (3470) (3970)	1700 (1900) (2200) (2500) (3000)	1558	2054	2044	2306 (2506) (2706)	1300 (1500) (1700)	284 〈225〉
SD-H/G-5080D								

Model	H	I	J	K	L	M	N
SD-H/G-5080S	—	—	1200 〈1200〉	100 〈100〉	1100 〈1100〉	—	—
SD-H/G-5080D	1300 (1500) (1700)	324		260 〈260〉	940 〈940〉	940 〈940〉	170 〈170〉

( ) : Modified stroke
〈 〉: Increased wrist flip torque

Request Yushin catalog https://www.ype.co.jp/request/